DXPULSE

EN
Original Instructions
Version 1 – 09/2025

12V BRUSHLESS
RATCHET WRENCH

29542, 29543 (EU)

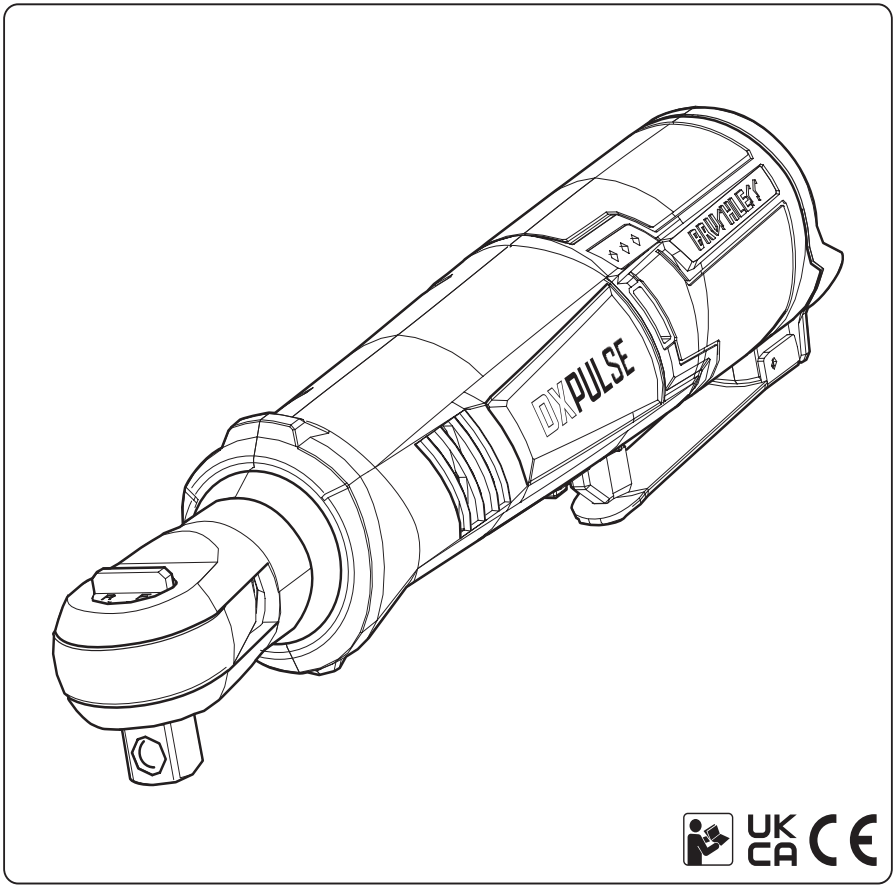

DE 12V BÜRSTENLOSER **RATSCHEN-SCHRAUBENSCHLÜSSEL** — Originalanleitung Version 1 – 09/2025

ES **LLAVE DE CARRACA** SIN ESCOBILLAS DE 12V — Instrucciones originales versión 1 – 09/2025

FR CLÉ À CLIQUET SANS **BALAIS 12V** — Instructions originales Version 1 – 09/2025

NL 12V BORSTELVRIJE **RATELSLEUTEL** — Originele instructies Versie 1 – 09/2025

EN Contents

DE Inhalt

ES Contenido

FR Sommaire

NL Inhoud

EN Identification and Unpacking 3
DE Identifizierung und Auspacken 3
ES Identificación y desembalaje 3
FR Identification et déballage 3
NL Identificatie en uitpakken 3

EN Battery Charging and Usage 4
DE Aufladen des Akkus und Verwendung 4
ES Carga y uso de la batería 4
FR Recharger et utiliser la batterie 4
NL Accu laden en gebruik 4

EN 1. Intended Use 7
EN 2. Specification 7
EN 3. Health and Safety Information 8
EN 4. Product Overview 11
EN 5. Preparation 11
EN 6. Operation 12
EN 7. Maintenance, Storage and Disposal 12
EN 8. Warranty 12
EN 9. Symbols 13

DE 1. Bestimmungsgemäße Verwendung 14
DE 2. Technische Daten 14
DE 3. Hinweise zu Gesundheit und Sicherheit 15
DE 4. Produktübersicht 18
DE 5. Vorbereitung 19
DE 6. Betrieb 19
DE 7. Wartung, Lagerung und Entsorgung 20
DE 8. Garantie 20
DE 9. Symbols 20

ES 1. Uso previsto 21
ES 2. Especificaciones 21
ES 3. Información sobre salud y seguridad 22
ES 4. Descripción del producto 25
ES 5. Preparación 26
ES 6. Funcionamiento 26
ES 7. Mantenimiento, almacenamiento y eliminación 27
ES 8. Garantía 27
ES 9. Símbolos 27

FR 1. Utilisation prévue 28
FR 2. Caractéristiques techniques 28
FR 3. Informations sur la santé et la sécurité 29
FR 4. Présentation du produit 32
FR 5. Préparation 33
FR 6. Fonctionnement 33
FR 7. Entretien, conservation et élimination 34
FR 8. Garantie 34
FR 9. Symbols 34

NL 1. Voorgenomen gebruik 35
NL 2. Specificatie 35
NL 3. Gezondheids- en veiligheidsinformatie 36
NL 4. Productoverzicht 39
NL 5. Voorbereiding 39
NL 6. Bediening 40
NL 7. Onderhoud, opslag en verwijdering 40
NL 8. Garantie 41
NL 9. Symbolen 41

EN **Identification and Unpacking**

FR **Identification et déballage**

DE **Identifizierung und Auspacken**

NL **Identificatie en uitpakken**

ES **Identificación y desembalaje**

A

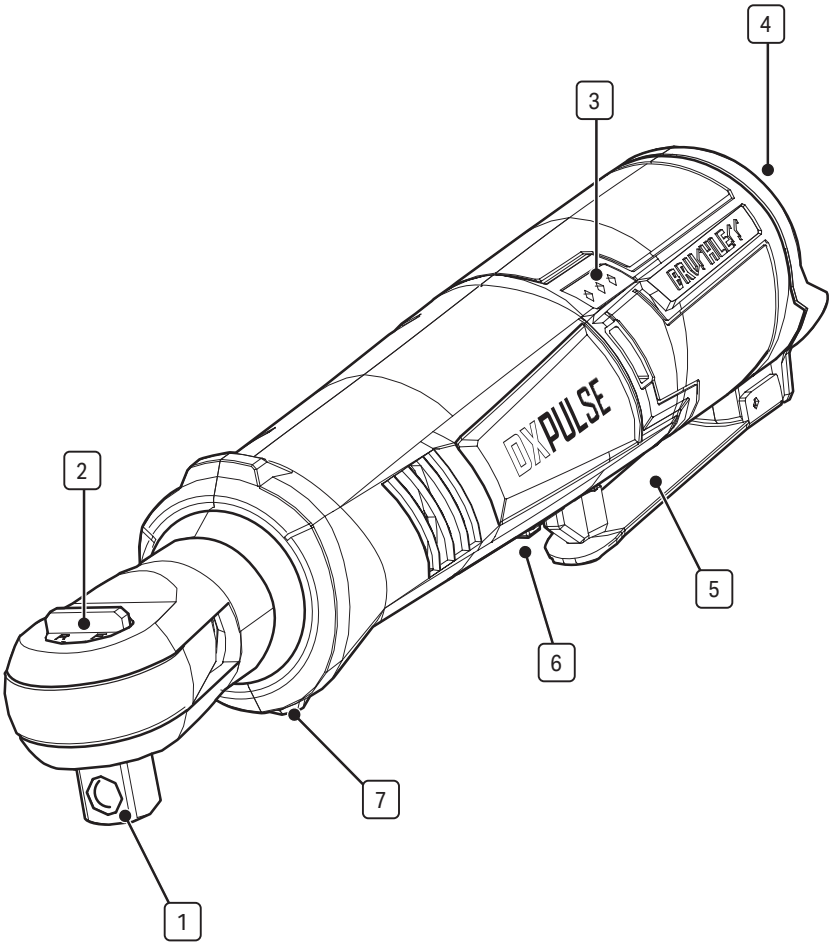

A1

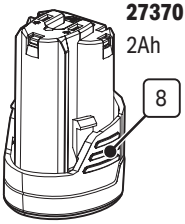

27370
2Ah

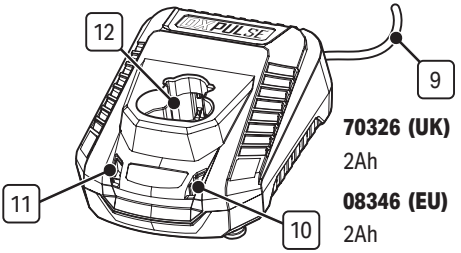

70326 (UK)
2Ah

08346 (EU)
2Ah

EN Battery Charging and Usage

DE Aufladen des Akkus und Verwendung

ES Carga y uso de la batería

FR Recharger et utiliser la batterie

NL Accu laden en gebruik

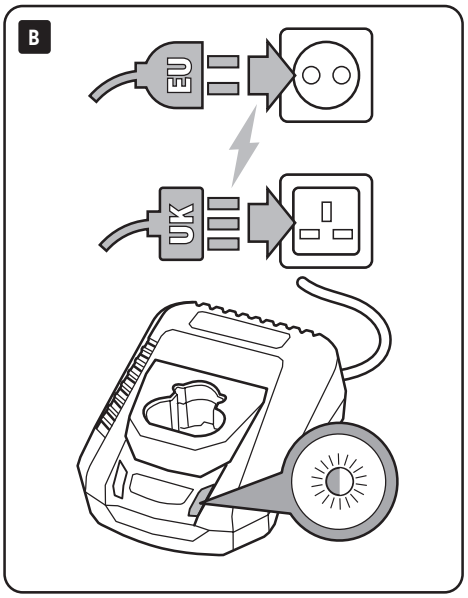

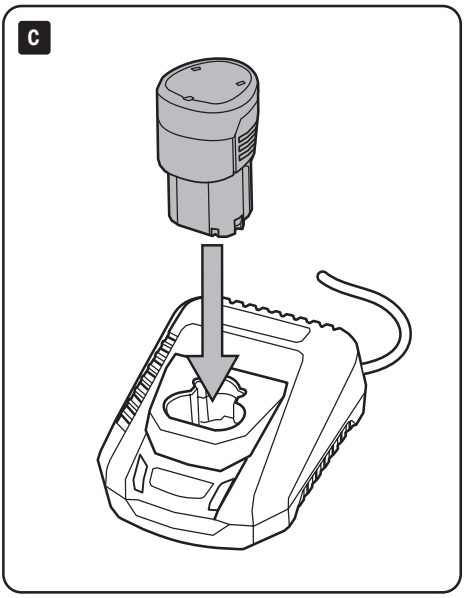

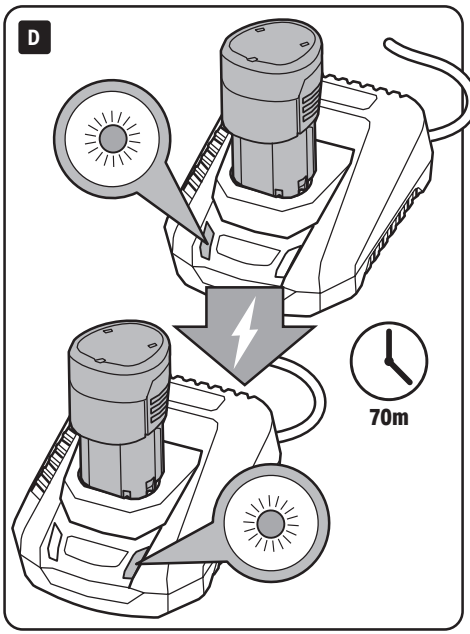

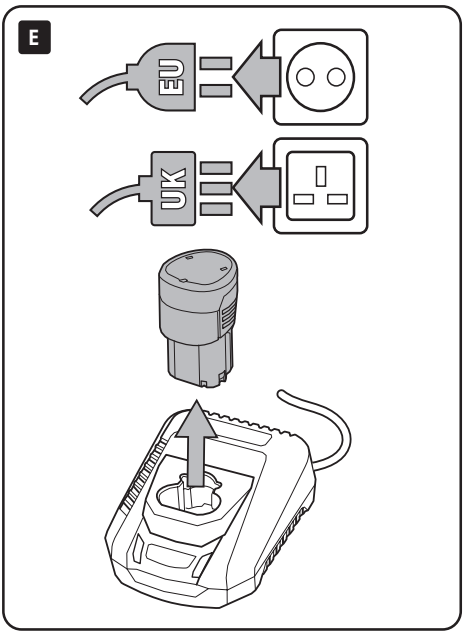

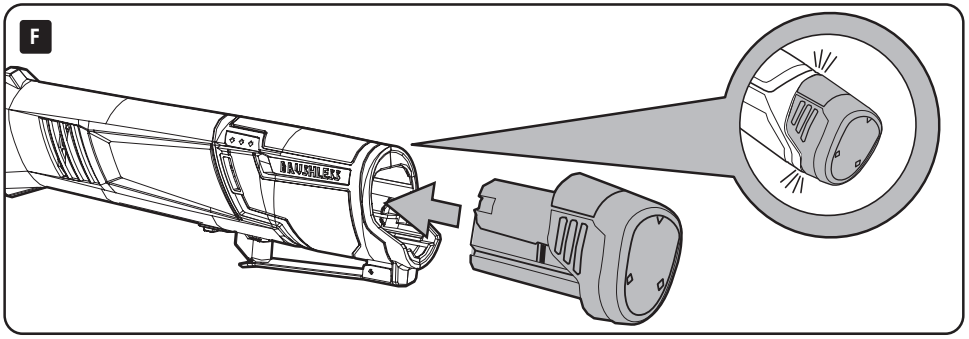
F

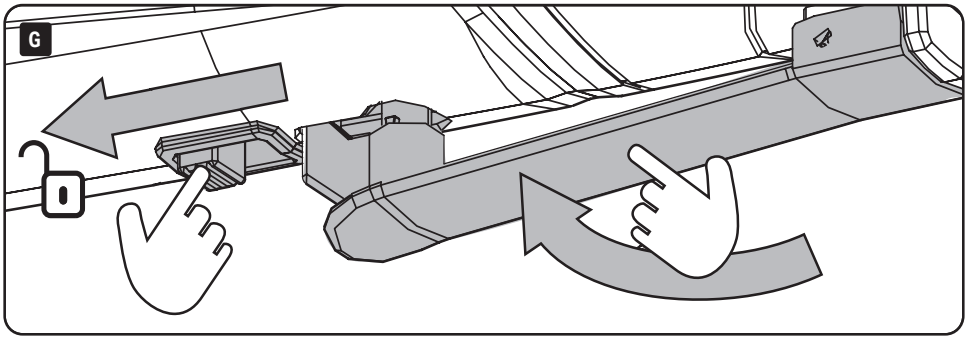
G

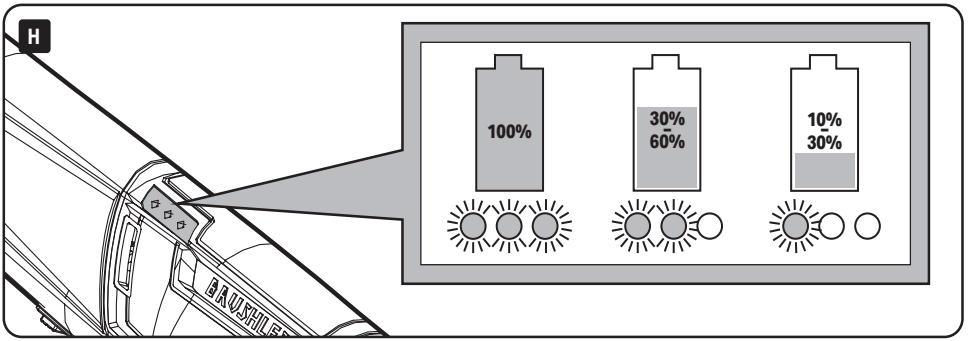
H
100%
30%
60%
10%
30%

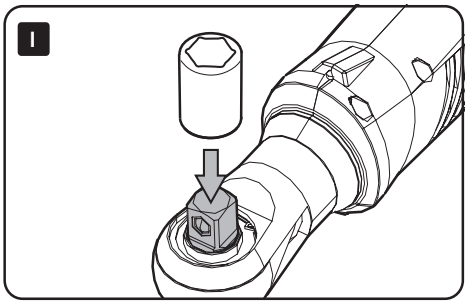
I

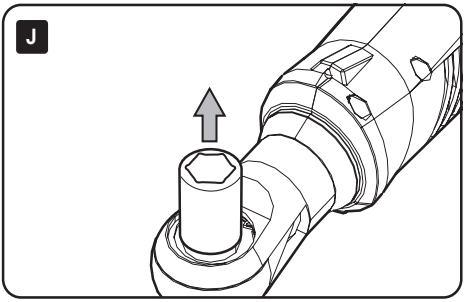
J

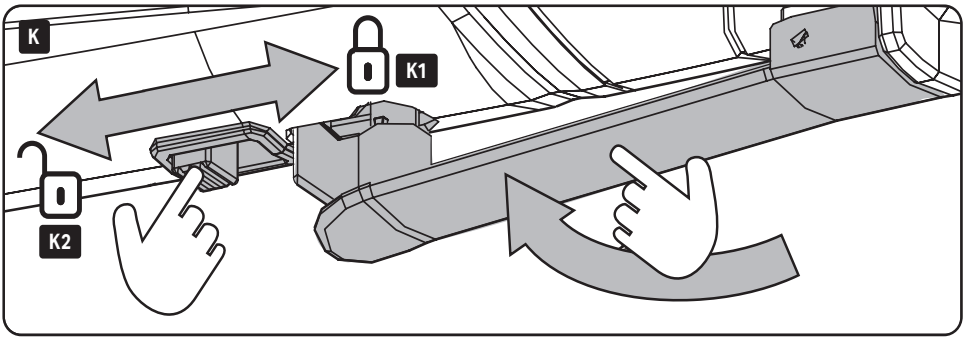
K
K1
K2

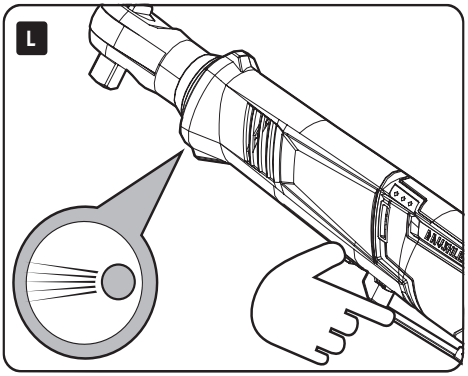
L

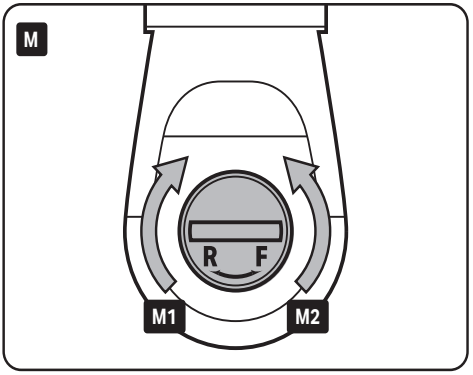
M
R
F
M1
M2

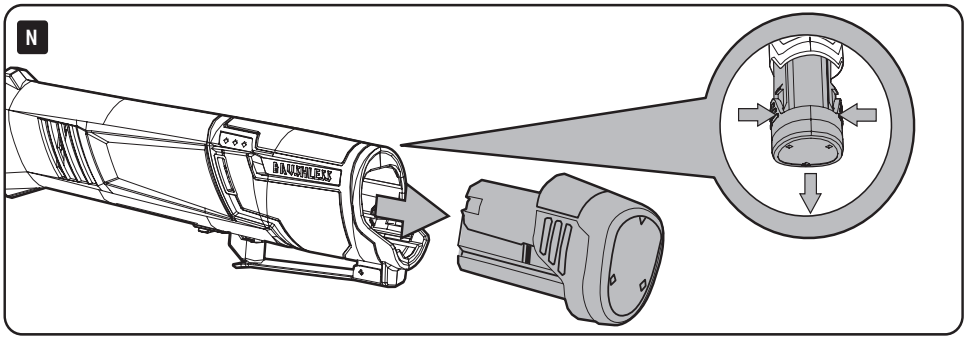
N

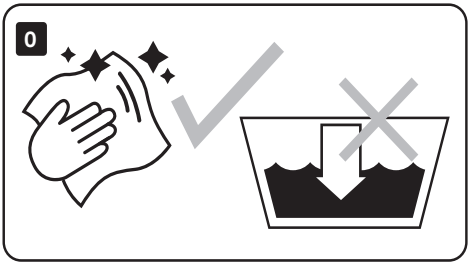
O


P

EN 1. Intended Use

This product is designed for fastening and loosening bolts and nuts.

Any other application beyond the conditions established for use will be considered misuse. Draper Tools accepts no responsibility for improper use of this product.

Read this manual in full before using this product and retain it for future use. Always use the latest version of the manual.

Please visit **drapertools.com/manuals** for the latest version.

EN 2. Specification

2.1 Product Specification

Stock No:	**29542 (UK) / 29543 (EU)**
Rated Voltage	12V DC
Square Drive:	1/2" (13mm)
Adaptor supplied:	3/8" (9.5mm)
Maximum Torque:	80Nm
Speed (no load):	0 – 170rpm
Sound Pressure Level (LpA):	81.7 dB(A)
Sound Power Level (LWA):	89.7dB(A)
Uncertainty (K)	3dB(A)
Vibration Level:	7.37m/s^2
Uncertainty (K)	1.5m/s^2
Net Weight:	
Tool & Battery (approx.):	1.35 – 1.5kg

2.2 DX12 Battery Pack

Stock No.	**27370**
Part No.	**122AH**
Type	Li-ion
Rating	2Ah
Rated Voltage	12V

2.3 DX12 Charger

Stock No.	**70326 (UK) / 08346 (EU)**
Part No.	**C12VDLI/ C12LI/EU**
Rated Voltage	230V/50Hz
Rated DC Output	
Voltage	12V
Current	2A
Protective Device Rated Current	3.15A
Construction	Class II
Charging Temperature	0 – 45°C
Charging Time (approx.)	
2A Battery	70mins

Important: The declared vibration total values and noise emissions values have been measured in accordance with a standard test method and may be used for comparing one tool with another. These values may also be used in a preliminary assessment of exposure.

WARNING! The vibration and noise emissions during actual use of the product can differ from the declared values depending on the type of work and the area upon which it is used. Before each use, estimate the likely exposure resulting from the actual conditions of use. Take into account all parts of the operation cycle in order to identify any safety measures required to protect the operator.

EN 3. Health and Safety Information

3.1 General Power Tool Safety Warnings

WARNING! Read all safety warnings, instructions, illustrations and specifications provided with this power tool. Failure to follow all instructions listed below may result in electric shock, fire and/or serious injury.

Save all warnings and instructions for future reference.

The term 'power tool' in the warnings refers to your mains-operated (corded) power tool or battery-operated (cordless) power tool.

Work Area Safety

- **Keep work area clean and well lit.**
  - Cluttered or dark areas invite accidents.
- **DO NOT operate power tools in explosive atmospheres, such as in the presence of flammable liquids, gases or dust.**
  - Power tools create sparks which may ignite the dust or fumes.
- **Keep children and bystanders away while operating a power tool.**
  - Distractions can cause you to lose control.

Electrical Safety

- **Power tool plugs must match the outlet. NEVER modify the plug in any way. DO NOT use any adapter plugs with earthed (grounded) power tools.**
  - Unmodified plugs and matching outlets will reduce risk of electric shock.
- **Avoid body contact with earthed or grounded surfaces, such as pipes, radiators, ranges and refrigerators.**
  - There is an increased risk of electric shock if your body is earthed or grounded.
- **DO NOT expose power tools to rain or wet conditions.**
  - Water entering a power tool will increase the risk of electric shock.
- **DO NOT abuse the cord. NEVER use the cord for carrying, pulling or unplugging the power tool. Keep cord away from heat, oil, sharp edges or moving parts.**
  - Damaged or entangled cords increase the risk of electric shock.
- **When operating a power tool outdoors, use an extension cord suitable for outdoor use.**
  - Use of a cord suitable for outdoor use reduces the risk of electric shock.
- **If operating a power tool in a damp location is unavoidable, use a residual current device (RCD) protected supply.**
  - Use of an RCD reduces the risk of electric shock.

Personal Safety

- **Stay alert, watch what you are doing and use common sense when operating a power tool. DO NOT use a power tool while you are tired or under the influence of drugs, alcohol or medication.**
  - A moment of inattention while operating power tools may result in serious personal injury.
- **Use personal protective equipment. Always wear eye protection.**
  - Protective equipment such as a dust mask, non-skid safety shoes, hard hat or hearing protection used for appropriate conditions will reduce personal injuries.
- **Prevent unintentional starting. Ensure the switch is in the 'OFF' position before connecting to power source, picking up or carrying the tool.**
  - Carrying power tools with your finger on the switch or energising power tools that have the switch on invites accidents.
- **Remove any adjusting key or wrench before turning the power tool on.**
  - A wrench or a key left attached to a rotating part of the power tool may result in personal injury.
- **DO NOT overreach. Keep proper footing and balance at all times.**
  - This enables better control of the power tool in unexpected situations.
- **Dress properly. DO NOT wear loose clothing or jewellery. Keep your hair, clothing and gloves away from moving parts.**

- Loose clothes, jewellery or long hair can be caught in moving parts.

- **If devices are provided for the connection of dust extraction and collection facilities, ensure these are connected and properly used.**
  - Use of dust collection can reduce dust-related hazards.
- **DO NOT let familiarity gained from frequent use of tools allow you to become complacent and ignore tool safety principles.**
  - A careless action can cause severe injury within a fraction of a second.

Power Tool Use and Care

- **DO NOT force the power tool. Use the correct power tool for your application.**
  - The correct power tool will do the job better and safer at the rate for which it was designed.
- **DO NOT use the power tool if the switch does not turn it on and off.**
  - Any power tool that cannot be controlled with the switch is dangerous and must be repaired.
- **Disconnect the plug from the power source and/or remove the battery pack, if detachable, from the power tool, before making any adjustments, changing accessories or storing power tools.**
  - Such preventive safety measures reduce the risk of starting the power tool accidentally.
- **Store idle power tools out of the reach of children and DO NOT allow persons unfamiliar with the power tool or these instructions to operate the power tool.**
  - Power tools are dangerous in the hands of untrained users.
- **Maintain power tools and accessories. Check for misalignment or binding of moving parts, breakage of parts and any other condition that may affect the power tool's operation. If damaged, have the power tool repaired before use.**
  - Many accidents are caused by poorly maintained power tools.
- **Keep cutting tools sharp and clean.**
  - Properly maintained cutting tools with sharp cutting edges are less likely to bind and are easier to control.
- **Use the power tool, accessories and tool bits etc. in accordance with these instructions, taking into account the working conditions and the work to be performed.**
  - Use of the power tool for operations different from those intended could result in a hazardous situation.
- **Keep handles and grasping surfaces dry, clean and free from oil and grease.**
  - Slippery handles and grasping surfaces do not allow for safe handling and control of the tool in unexpected situations.

Service

- **Have your power tool serviced by a qualified repair person using only identical replacement parts.**
  - This will ensure that the safety of the power tool is maintained.
- **NEVER service damaged battery packs.**
  - Service of battery packs should only be performed by the manufacturer or authorized service providers.

Battery Tool Use and Care

- **Recharge only with the charger specified by the manufacturer.**
  - A charger that is suitable for one type of battery pack may create a risk of fire when used with another battery pack.
- **Use power tools only with specifically designated battery packs.**
  - Use of any other battery packs may create a risk of injury and fire.
- **When battery pack is not in use, keep it away from other metal objects, like paper clips, coins, keys, nails, screws or other small metal objects, that can make a connection from one terminal to another.**
  - Shorting the battery terminals together may cause burns or a fire.
- **ALWAYS** switch off the tool and remove the battery before changing accessories or adjusting the tool.
- **DO NOT use a battery pack or tool that is damaged or modified.**
  - Damaged or modified batteries may exhibit unpredictable behaviour resulting in fire, explosion or risk of injury.
- **DO NOT expose a battery pack or tool to fire or excessive temperature.**
  - Exposure to fire or temperature above 130 °C may cause explosion.
- **Follow all charging instructions and DO NOT charge the battery pack or tool outside the temperature range specified in the instructions.**
  - Charging improperly or at temperatures outside the specified range may damage the battery and increase the risk of fire.
- **If the tool is operated continuously until the battery pack has discharged, allow the tool to rest for 15 minutes before continuing with a fresh battery.**

CAUTION! DO NOT look directly into the work light

3.2 Additional Safety Warnings for Ratchet Wrench

- **Hold the power tool by insulated gripping surfaces, when performing an operation where the fastener may contact hidden wiring or its own cord.**
  - Fasteners contacting a 'live' wire may make exposed metal parts of the power tool 'live' and could give the operator an electric shock.
- **ALWAYS** be sure you have a firm footing.
- Ensure no one is below when using the tool in high locations.
- Hold the tool firmly.
- Wear ear protectors.
- Keep hands away from rotating parts.
- Check the impact socket carefully for wear, cracks or damage before installation.
- **DO NOT** touch the ratchet head, impact socket, bolt, nut or the workpiece immediately after long time operation. They may be extremely hot and could burn your skin.

3.3 Safety instructions for Mains Powered Chargers & Battery Packs

- **Before using the battery pack or charger, read all instructions and cautionary markings on the battery, charger and the product using the battery.**

Chargers

- The charger is for indoor use only. **DO NOT** expose to rain.
- Prior to plugging the charger in to the supply, check that the plug, cord and charger casing are in good condition. If any are damaged, have the defective part(s) replaced immediately by a suitably qualified person.
- Only use a correctly rated mains outlet to provide power, **DO NOT** plug into site generators, attach to engine generators or D.C. sources. **DO NOT** use a mains socket outlet that is not switched.
- Use the correct Draper charger in conjunction with its corresponding battery pack (Visit **drapertools.com** for more information).
- The charger must be disconnected from the power supply before removing the battery.
- **DO NOT** charge any other batteries with Draper chargers. Any other application is considered misuse.
- **DO NOT** attempt to charge non-rechargeable batteries.
- **DO NOT** attempt to charge battery packs that are too hot (over 45°C) or too cold (under 5°C), if these conditions apply set the battery pack aside to 'normalise' before proceeding with the charging operation.
- Set up the charger and cord in a safe place where they will not be knocked, tripped over, stepped on, etc. and where it is well ventilated. Ensure the ventilation slots in the charger case are not obstructed.
- Switch the charger on and check that the correct indicators illuminate, allow the battery pack to charge. Once charging is complete, switch the charger off, disconnect from power supply, remove the battery pack and store.

Battery Packs

- Only use Draper recommended battery packs with this tool.
- Inspect the battery pack for damage, if it is undamaged, plug it into the charger, ensuring the correct orientation.
- **DO NOT** short the battery pack:
  - **DO NOT** touch the terminals with any conductive material.
  - Avoid storing battery pack in a container with other metal objects such as nails, coins, etc.
  - **DO NOT** expose battery cartridge to water or rain.
- The battery must be removed from the tool before it is recycled.
- The battery is to be disposed of in-line with local authority procedures.
- **DO NOT** crush, open or burn the battery. Exposure to potentially harmful materials may occur.
- In case of fire use CO2 or dry chemical extinguisher.
- **DO NOT** expose to high temperatures >50°C. The battery may degrade at high temperatures.
- Charge battery in conditions between 5°C to 45°C with the designated charger for the battery.
- Do not use battery if it has been stored at 5°C or less. Allow it to 'normalise' at room temperature before usage/charging.

WARNING! – Leaking battery packs

- The electrolyte in battery packs is corrosive. Avoid contact with the skin.
- If contact is made, flush the area with clean water, pat dry and seek medical attention at the earliest opportunity.
- Inform medical personnel that the contaminant is a 'high alkaline, corrosive liquid'.

- If electrolyte comes into contact with the eyes, flush with plenty of water only. Seek immediate medical attention, relaying the information above.

3.4 Connection to the Power Supply (Charger)

CAUTION! Risk of electric shock. DO NOT open.

This appliance is supplied with an approved plug and cord for your safety.

This appliance is Class II and is designed for connection to a power supply matching that detailed on the rating label and compatible with the plug fitted.

If the power supply cord is damaged, it must be replaced by Draper Tools, an authorised service agent or similarly qualified personnel in order to avoid a hazard.

The damaged or incomplete plug, when cut from the cord, shall be disabled to prevent connection to a live electrical outlet.

The value of the fuse fitted is marked on the pin face of the plug. Should the fuse need replacing, use a small plain-slot screwdriver to remove the fuse cover. Ensure the substitute is of the correct rating, approved to BS 1362 and ASTA or BS Kite marked. This should only be performed by suitably qualified personnel.

ASTA

BSI

Important: If an extension lead is required, use an approved and compatible lead rated for this appliance.

Unwind the entire cable and follow all the instructions supplied with the extension lead.

†Double insulated ⧈: This product requires no earth connection as supplementary insulation is applied to the basic insulation to protect against electric shock in the event of failure of the basic insulation.

3.5 Residual Risk

The safety instructions in this manual cannot account for all possible conditions and situations that may occur. Exercise common sense and caution when using this product and protect against any additional conceivable risks.

EN 4. Product Overview A

1 Square drive

2 Forward/Reverse selector

3 Battery charge indicators

4 Battery compartment

5 **ON/OFF** speed trigger

6 Trigger lock

7 Worklight

A1 Optional Accessories (Available separately)

DX12 Battery

8 2 × Battery release tab

DX12 Charger

9 Power supply

10 Green charging indicator light

11 Red charging indicator light

12 Battery charging port

Please visit **drapertools.com** for our full range of DX12 batteries, chargers, accessories and consumables.

EN 5. Preparation

5.1 Charging the Battery B – E

- Fully charge before first use.
- Ensure the battery is fully insert correctly into the charger.
- Always unplug the charger after use.

Status	Lights	
	Green	Red
Charger plugged in	Flashing	OFF
Battery charging	OFF	ON
Battery fully charged	ON	OFF
Battery too hot Battery not inserted correctly	Flashing	Flashing

5.2 Fitting Battery to Tool F

5.3 Battery Charge Indicators G – H

- Slide the trigger lock 6 to the unlock position. Then press the trigger 5 and the battery indicator lights 3 will show the remaining battery life.

5.4 Fitting & Removing Impact Socket I – J

- Push the socket onto the square drive 1 to fit and pull off to remove.

Notes:

- Lock the trigger before fitting the socket - **see 6.1**.
- To avoid damage or injury always use the correct sized socket and ensure it is locked on correctly.

EN 6. Operation

6.1 ON/OFF Speed Trigger Action K

- Slide the trigger lock 6 to the unlock position K2 .
- Then press the trigger 5 to operate and apply pressure to increase the speed.
- Release the trigger to stop.

Important: ALWAYS slide the trigger lock to the locked position K1 when the tool is not in use.

6.2 Worklight Operation L

Note: if the tool overheats the light with flash. Allow to cool down before operating again.

6.3 Reverse/Forward Selection M

M1 Turn the lever to left for clockwise/forward rotation.

M2 Turn the lever to the right for anticlockwise/reverse rotation.

- Only change the direction of rotation when the tool is not in operation.

6.4 Basic Operation

- Ensure the battery pack if fully fitted before operating the tool.
- Ensure the socket is correctly locked onto the drive before use.
- Hold the tool firmly and place the socket over the bolt or nut and then turn to fasten. The tool will stop once the bolt/nut reaches the seating position.
- **ALWAYS** check the direction of rotation before operating the tool.
- Use the correct sized socket for the bolt/nut being fastened or loosened.
- **DO NOT** cover the tool vents during use.

6.5 Removing Battery for Charging N

6.6 Tool/Battery Protection System

- The tool is equipped with a tool/battery protection system which automatically cuts off power to the motor to extend tool and battery life.
- The tool/battery will automatically stop under one of the following conditions:
  - **Overload protection** – an abnormally high current is drawn. Turn off the tool and stop the application that caused the tool to overload. Then turn the tool on to restart.
  - **Overheat protection** – tool stops due to overheating. Allow the tool/battery to cool before turning the tool on again.
  - **Over discharge protection** – battery capacity is insufficient. Remove the battery from the tool and charge the battery.

EN 7. Maintenance, Storage and Disposal O - P

Important: Always ensure the trigger is in the locked position and the battery pack is removed from the tool before carrying out any cleaning, servicing or maintenance.

- **DO NOT** use solvents or abrasives to clean the tool.
- Keep the ventilation slots clean free from debris.
- Store the tool in a safe dry area, out of the reach of children
- At the end of its working life, dispose of the product responsibly and in line with local regulations. Recycle where possible.
- **DO NOT** dispose of this product with domestic waste; most local authorities provide appropriate recycling facilities.



- **DO NOT** incinerate.
- **DO NOT** burn or mutilate batteries; this may release toxic or corrosive substances.



- **DO NOT** short circuit cells, may cause burns.
- The battery pack must be removed from the tool before it is scrapped and disposed of safely.
- Do not dispose of batteries in a charged condition.
- Expired batteries must be recycled/disposed of in accordance with the appropriate regulation or legislation. They should be returned to your local warranty agent/stockist.

EN 8. Warranty

12 months from date of purchase –
Visit **drapertools.com/warranty** for more information.

EN 9. Symbols



Warning!



Read the instruction manual



Wear protective gloves



Wear suitable eye protection and breathing apparatus



Wear ear defenders



Do not incinerate or throw onto fire



For indoor use only. Do not expose to rain



Class II construction (double insulated]



WEEE – Waste Electrical & Electronic Equipment

Do not dispose of Waste Electrical & Electronic Equipment in with domestic rubbish



UK Conformity Assessed



European Conformity

EN Notes

DE Notizen

ES Notas

FR Remarques

NL Aantekeningen

EN Notes

DE Notizen

ES Notas

FR Remarques

NL Aantekeningen

Contact Details

DXPULSE

Draper Tools
Hursley Road
Chandler's Ford
Eastleigh
Hampshire
SO53 1YF
UK

Draper Tools Europe B.V
Oude Graaf 8
6002 NL
Weert
Netherlands

Website: drapertools.com
Email: sales@drapertools.com
Product Helpline: +44 (0) 23 8049 4344
Telephone Sales Desk: +44 (0) 23 8049 4333
General Enquiries: +44 (0) 23 8026 6355

Please contact the Helpline for repair and servicing enquiries.

© DX PULSE Published by Draper Tools Limited

DXPULSE

EN
Original Instructions
Version 1 – 09/2025

12V LI-ION
BATTERY CHARGER & BATTERIES

70326, 27376 , 27377 (EU), 08346 (EU), 27370, 70311, 27878

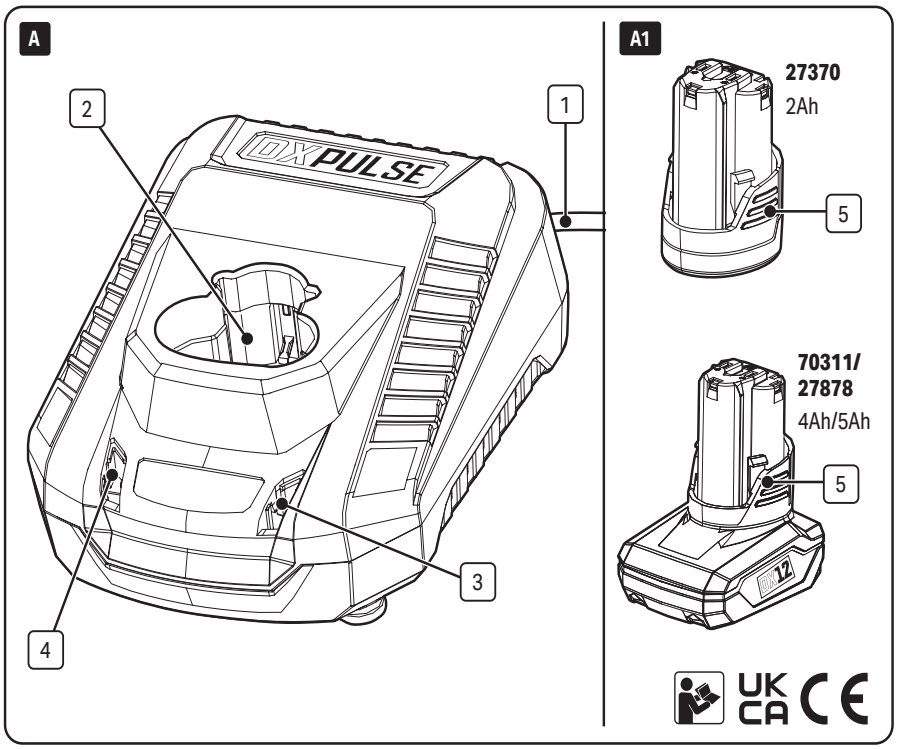

DE **AKKULADEGERÄT UND AKKUS** 12 V LI-ION — Originalanleitung Version 1 – 09/2025

ES 12V LI-ION **CARGADOR DE BATERÍAS Y PILAS** — Instrucciones originales Versión 1 – 09/2025

FR 12V LI-ION **CHARGEUR DE BATTERIE & BATTERIES** — Instructions d'origine Version 1 – 09/2025

NL 12V LI-ION **BATTERIJLADER & BATTERIJEN** — Originele instructies Versie 1 – 09/2025

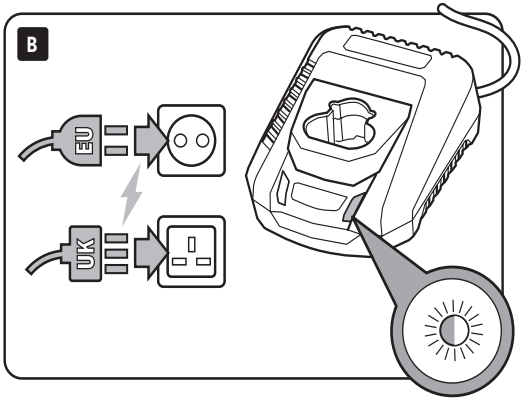
B
EU
UK

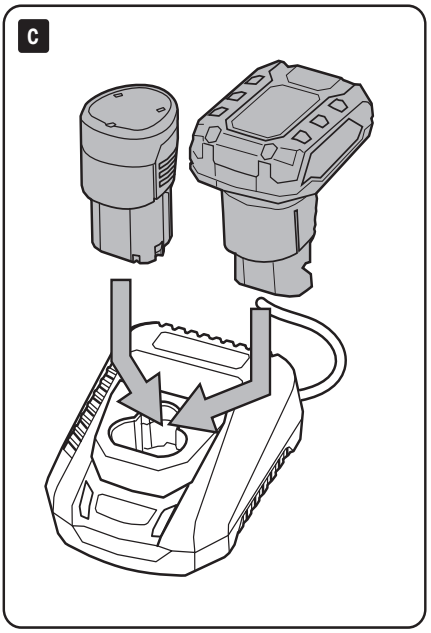
C

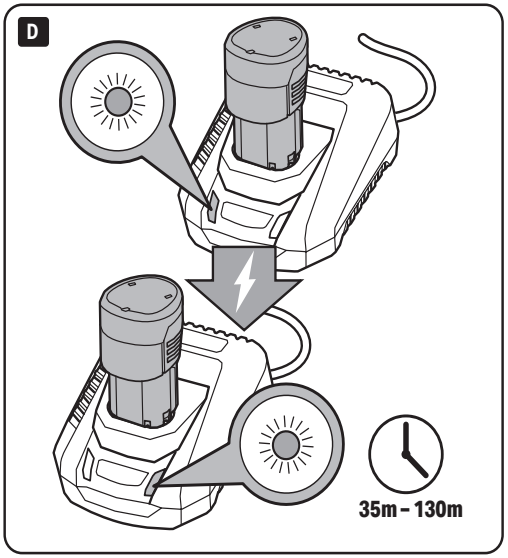
D
35m – 130m

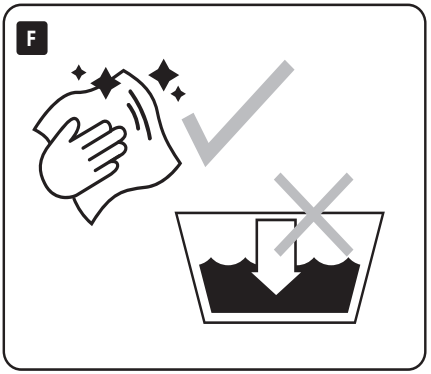
F

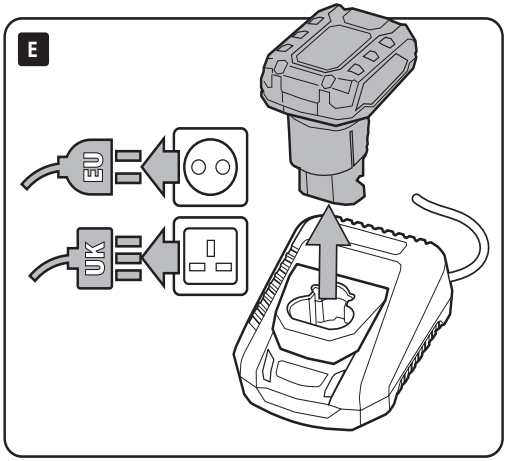
E
EU
UK


G

EN 1. Specification

1.1 Product Specification

Stock No.	70326 (UK) /08346 (EU)	27376 (UK)	27377 (EU)
Part No.	**C12VDLI /C12LIEU**	**V12FBC4UK**	**V12FBC4EU**
Rated Voltage	230V/50Hz	230V/50Hz	230V/50Hz
Rated DC Output			
Voltage	12V	12V	
Current	2A	4A	
Protective Device Rated Current	3.15A	3.15A	
Construction	Class II	Class II	
Charging Temperature	0 – 45°C	0 – 45°C	
Charging Time (approx.)			
2A Battery	70mins	35mins	
4A Battery	130mins	70mins	
5A Battery	160mins	85mins	

1.2 DX12 Battery Pack (available separately)

Stock No.	27370	70311	27878
Part No.	**122AH**	**CB12VDL14.0**	**125AH**
Type	Li-ion	Li-ion	Li-ion
Rating	2Ah	4Ah	5Ah
Rated Voltage	12V	12V	12V

EN 2. Health and Safety Information

2.1 Battery Tool General Health & Safety Precautions

- **Recharge only with the charger specified by the manufacturer.**
  - A charger that is suitable for one type of battery pack may create a risk of fire when used with another battery pack.
- **Use power tools only with specifically designated battery packs.**
  - Use of any other battery packs may create a risk of injury and fire.
- **When battery pack is not in use, keep it away from other metal objects, like paper clips, coins, keys, nails, screws or other small metal objects, that can make a connection from one terminal to another.**
  - Shorting the battery terminals together may cause burns or a fire.
- **ALWAYS switch off the tool and remove the battery before changing accessories or adjusting the tool.**
- **DO NOT use a battery pack or tool that is damaged or modified.**
  - Damaged or modified batteries may exhibit unpredictable behaviour resulting in fire, explosion or risk of injury.
- **DO NOT expose a battery pack or tool to fire or excessive temperature.**
  - Exposure to fire or temperature above 130 °C may cause explosion.
- **Follow all charging instructions and do not charge the battery pack or tool outside the temperature range specified in the instructions.**
  - Charging improperly or at temperatures outside the specified range may damage the battery and increase the risk of fire.

2.2 Safety instructions for Mains Powered Chargers & Battery Packs

- **Before using the battery pack or charger, read all instructions and cautionary markings on the battery, charger and the product using the battery.**
- **NEVER service damaged battery packs. Service of battery packs should only be performed by the manufacturer or authorised service providers.**

Chargers

- The charger is for indoor use only. **DO NOT** expose to rain.
- Prior to plugging the charger in to the supply, check that the plug, cord and charger casing are in good condition. If any are damaged, have the defective part(s) replaced immediately by a suitably qualified person.
- Only use a correctly rated mains outlet to provide power, **DO NOT** plug into site generators, attach to engine generators or D.C. sources. **DO NOT** use a mains socket outlet that is not switched.
- Use the correct Draper charger in conjunction with its corresponding battery pack (Visit **drapertools.com** for more information).
- The charger must be disconnected from the power supply before removing the battery.
- **DO NOT** charge any other batteries with Draper chargers. Any other application is considered misuse.
- **DO NOT** attempt to charge non-rechargeable batteries.
- **DO NOT** attempt to charge battery packs that are too hot (over 45°C) or too cold (under 5°C), if these conditions apply set the battery pack aside to 'normalise' before proceeding with the charging operation.
- Set up the charger and cord in a safe place where they will not be knocked, tripped over, stepped on, etc. and where it is well ventilated. Ensure the ventilation slots in the charger case are not obstructed.
- Switch the charger on and check that the correct indicators illuminate, allow the battery pack to charge. Once charging is complete, switch the charger off, disconnect from power supply, remove the battery pack and store.

Battery Packs

- Only use Draper recommended battery packs with this charger.
- Inspect the battery pack for damage, if it is undamaged, plug it into the charger, ensuring the correct orientation.
- **DO NOT** short the battery pack.
- **DO NOT** touch the terminals with any conductive material.
  - Avoid storing battery pack in a container with other metal objects such as nails, coins, etc.
  - **DO NOT** expose battery cartridge to water or rain.
- The battery must be removed from the tool before it is recycled.
- The battery is to be disposed of in-line with local authority procedures.
- **DO NOT** crush, open or burn the battery. Exposure to potentially harmful materials may occur.
- In case of fire use CO2 or dry chemical extinguisher.
- **DO NOT** expose to high temperatures >50°C. The battery may degrade at high temperatures.
- Charge battery in conditions between 5°C to 45°C with the designated charger for the battery.
- **DO NOT** use battery if it has been stored at 5°C or less. Allow it to 'normalise' at room temperature before usage/charging.

WARNING! – Leaking battery packs

- The electrolyte in battery packs is corrosive. Avoid contact with the skin.
- If contact is made, flush the area with clean water, pat dry and seek medical attention at the earliest opportunity.
- Inform medical personnel that the contaminant is a 'high alkaline, corrosive liquid'.
- If electrolyte comes into contact with the eyes, flush with plenty of water only. Seek immediate medical attention, relaying the information above.

2.3 Connection to the Power Supply (Charger)

CAUTION! Risk of electric shock.
DO NOT open.

This appliance is supplied with an approved plug and cord for your safety.

This appliance is Class II and is designed for connection to a power supply matching that detailed on the rating label and compatible with the plug fitted.

If the power supply cord is damaged, it must be replaced by Draper Tools, an authorised service agent or similarly qualified personnel in order to avoid a hazard.

The damaged or incomplete plug, when cut from the cord, shall be disabled to prevent connection to a live electrical outlet.

The value of the fuse fitted is marked on the pin face of the plug. Should the fuse need replacing, use a small plain-slot screwdriver to remove the fuse cover. Ensure the substitute is of the correct rating, approved to BS 1362 and ASTA or BS Kite marked. This should only be performed by suitably qualified personnel.

ASTA

BSI

Important: If an extension lead is required, use an approved and compatible lead rated for this appliance.

Unwind the entire cable and follow all the instructions supplied with the extension lead.

†Double insulated ⧈: This product requires no earth connection as supplementary insulation is applied to the basic insulation to protect against electric shock in the event of failure of the basic insulation.

EN 3. Product Overview A

DX12 Charger

1 Power supply.

2 Battery charging port.

3 Green charging indicator light.

4 Red charging indicator light.

DX12 Battery (available separately).

5 2 × Battery release tab.

Please visit **drapertools.com** for our full range of DX12 batteries, chargers, accessories and consumables.

EN 4. Charging the Battery B – E

- Fully charge before first use.
- Ensure the battery is fully insert correctly into the charger.
- **ALWAYS** unplug the charger after use.

Status	Lights	
	Green	Red
Charger plugged in	Flashing	OFF
Battery charging	OFF	ON
Battery fully charged	ON	OFF
Battery too hot Battery not inserted correctly	Flashing	Flashing

EN 5. Maintenance, Storage and Disposal F – G

Important: ALWAYS ensure the battery pack is removed and the charger is unplugged before carrying out any cleaning, servicing or maintenance.

- Store in a safe dry area, out of the reach of children.
- At the end of its working life, dispose of the product responsibly and in line with local regulations. Recycle where possible.
- **DO NOT** dispose of this product with domestic waste; most local authorities provide appropriate recycling facilities.



- **DO NOT** incinerate.
- **DO NOT** burn or mutilate batteries; this may release toxic or corrosive substances.



- **DO NOT** short circuit cells, may cause burns.
- The battery pack must be removed from the tool before it is scrapped and disposed of safely.
- **DO NOT** dispose of batteries in a charged condition.
- Expired batteries must be recycled/disposed of in accordance with the appropriate regulation or legislation. They should be returned to your local warranty agent/stockist.

EN 6. Warranty

12 months from date of purchase –
Visit **drapertools.com/warranty** for more information.

EN 7. Symbols



Warning!



Read the instruction manual



Do not incinerate or throw onto fire



For indoor use only. Do not expose to rain



Class II construction (double insulated]



WEEE – Waste Electrical & Electronic Equipment

Do not dispose of Waste Electrical & Electronic Equipment in with domestic rubbish



UK Conformity Assessed



European Conformity

EN Notes

DE Notizen

ES Notas

FR Remarques

NL Opmerkingen

EN Notes

DE Notizen

ES Notas

FR Remarques

NL Opmerkingen

Contact Details

DXPULSE

Draper Tools
Hursley Road
Chandler's Ford
Eastleigh
Hampshire
SO53 1YF
UK

Draper Tools Europe B.V
Oude Graaf 8
6002 NL
Weert
Netherlands

Website: drapertools.com
Email: sales@drapertools.com
Product Helpline: +44 (0) 23 8049 4344
Telephone Sales Desk: +44 (0) 23 8049 4333
General Enquiries: +44 (0) 23 8026 6355

Please contact the Helpline for repair and servicing enquiries.

© DX PULSE Published by Draper Tools Limited